USER GUIDE

MOBILE ALUMINIUM TOWER

XO LADDERSPAN

3T- Though The Trapdoor Method

www.ymfg.co.in

Contents

1 Saftey First

1.1 Introduction 1
1.2 Preparation and Inspection 1
1.3 Safe Use 2
1.4 Lifting of Equipment 2
1.5 Stabilisers/ballast 2
1.6 Movement 2
1.7 During Use 3
1.8 Ties 4
1.9 Maintenance - storage - transport 4
1.10 Tower Designation 5

2 Quantity Schedule

2.1 XO 1450 Ladderspan
2.1.1 Quantity Schedule 6
2.1.2 Number of working platforms allowed 7
2.1.3 Platform Loading 7
2.1.4 1450 width towers 7
2.1.5 Stabilisers 7
2.1.6 Angle of stabiliser 1450 tower 8
2.1.7 Double width 1450 towers dimension x 8
2.2 XO 850 Ladderspan
2.2.1 Quantity Schedule 9
2.2.2 Number of working platforms allowed 10
2.2.3 Platform Loading 10
2.2.4 Ballast: Internal/external use 10
2.2.5 850 width towers 10
2.2.6 Stabilisers 11
2.2.7 Double width 850 towers dimension x 11

3 Assembly Procedure

3.1 3T method Assembly and dismantling procedures
3.1.1 When building a XO Tower: 12
3.1.2 To dismantle a XO Ladderspan tower 12
3.2 3T method Checklist 13
3.3 1450 3T method assembly for 1450 towers 14
3.3.1 When building beyond a 4.2m platform height 19
3.3.2 Dismantling Procedure 20
3.4 3T method Assembly for 850 towers 21
3.4.1 Dismantling Procedure 25

4 Toe Boards

4.1 3T method Fitting toe boards 26

5 Stabilisers and Outriggers

5.1 3T method Stabilisers 27
5.2 Stabiliser dimensions 27
5.3 Outriggers 27

1 Safety First

1.1 Introduction

***Please read this user guide carefully. Please note that diagrams are for illustrative purposes only. User guides are also available to download from our website at* www.ymfg.co.in/literature.**

- XO mobile aluminium towers are light-weight scaffold towers used throughout the building and construction industry for both indoor and outdoor access solutions where a stable and secure platform is required. Ideal for maintenance and installation work or short-term access, the highly versatile towers provide a strong working platform for a variety of heights. This user guide provides you with step by step instructions to ensure your system is assembled easily and safely, using the 3T (Through the Trapdoor) method.
- The law requires that personnel erecting, dismantling or altering towers must be competent. Any person erecting a XO mobile tower must have a copy of this guide.
- For further information on the use of mobile access and working towers consult the SAFETY FI RST operators code of practice. If you need further information, design advice, additional guides or any other help with this product, please contact the manufacturer on Contact: 9015964626, 9205586056 or Email : sales@ymfg.co.in

Compliances

TÜVINDIA

TÜVNORDGROUP

The Xo Ladder Span Tower has been designed, tested and approved and certified to EN 1004- 1:2020.

This instruction manual is in Compliance with EN 1004- 1:2020.

1.2 Preparation and inspection

Inspect the equipment before use to ensure that it is not damaged and that it functions properly. Damaged or incorrect components should not be used.

1 Safety First

1.3 Safe Use

- Check that all components are onsite, undamaged and that they are functioning correctly (refer to Checklist and Quantity Schedules). Damaged or incorrect components should not be used.
- Check if the ground on which the mobile access tower is to be erected and moved is capable of supporting the tower.
- The safe working load is 275 kgs (606lbs), per platform level, uniformly distributed up to a maximum of 950kgs (2100lbs), per tower (including self-weight).
- Towers must always be climbed from the inside using the built-in ladder during assembly and use.
- It is recommended that towers should be tied to a solid structure when left unattended.
- Adjustable legs should only be used for levelling.

1.4 Lifting of equpiment

- Tower components should be lifted using a reliable lifting material (e.g. strong rope), employing a reliable knot (e.g. clove hitch), to ensure safe fastening and always lift within the footprint of the tower.
- Assembled mobile towers should not be lifted with a crane or other lifting devices.

1.5 Stabilisers/ballast

- Stabilisers or outriggers and ballast weights shall always be fitted when specified.
- The Quantity Schedules show the recommended stabilisation.
  In circumstances where there is restricted ground clearance for stabilisers/outriggers, contact your supplier for advice. Ballast must be of solid materials (i.e. not water or loose sand) and should not be positioned to overload individual legs. Ballast should be secured against accidental removal where practicable, and be supported on the lowest rung of the bottom frame.

1.6 Movement

- The tower should only be moved by manual effort, and only from the base.
- When moving the tower, beware of live electrical apparatus,
  (particularly overhead) plus wires or moving parts of machinery.
- No person or materials should be on the tower during movement.
- Caution should be exercised when wheeling a tower over rough, uneven or sloping ground, taking care to unlock and lock castors. If stabilisers are fitted, they should only be lifted a maximum of 25mm above the ground to clear ground obstructions.
- The overall height of the tower when being moved, should not exceed 2.5 times the minimum base dimensions, or 4 metres overall height.

1 Safety First

- Before use, check that the tower is still correct and complete.
- After every movement of the tower, use a spirit level to check that it is vertical and level and set the adjustable legs as required.
- Do not move the tower in wind speeds over 7.7 metres per second (17mph).

1.7 During use

- Beware of high winds in exposed, gusty or medium breeze conditions. We recommend that in wind speeds over 7.7 metres per second (17mph), cease working on the tower and do not attempt to move it. If the wind becomes a strong breeze, (expected to reach 11.3 metres per second - 25 mph) tie the tower to a rigid structure. If the wind is likely to reach gale force, (over 18 metres per second - 40 mph) the tower should be dismantled.
- Beware of open-ended buildings, which can cause a funnelling effect.
- Do not abuse equipment. Damaged or incorrect components shall not be used.
- Raising and lowering components, tools, and/or materials by rope should be conducted within the lower base. Ensure that the safe working load of the supporting decks and the tower structure is not exceeded.
- The assembled tower is a working platform and should not be used as a means of access or egress to other structures.
- Beware of horizontal forces (e.g. power tools) which could generate instability. **Maximum horizontal force 30kg.**
- The stairway towers, featuring an inclined staircase access, are for frequent use by personnel carrying tools and/or materials.
- Mobile towers are not designed to be suspended - please refer to your supplier for advice.
- Do not use boxes or stepladders or other objects on the platform to gain extra height.

Wind Description	Beaufort Scale	Beaufort No.	Speed in Mph	Speed in M/sec
Medium Breeze	Raises dusts and loose paper, twigs snap off	4	8-12	4-6
Strong Breeze	Large Brances in motion, telegraph wire whistle	6	25-31	11-14
Gale Force	Walking is difficult	8	39-46	17-21

1 Safety First

1.8 Ties

- Ties should be used when the tower goes beyond its safe height, beyond the limits of the stabilisers/outriggers, or if there is a danger of instability. They should be rigid, two-way ties fastened to both uprights of the frame with load-bearing right angled or swivel couplers. Only couplers suitable for the 50.8mm diameter tube of the tower should be used. Ideally, ties should be secured to both faces of a solid structure by means of anchorages.
- The tie frequency may vary depending on the application, but they should (at a minimum) be at every 4 metres height.
- For further information on tying-in a tower please contact your supplier or the manufacturer.

1.9 Maintenance - storage - transport

- All components and their parts should be regularly inspected to identify damage, particularly to joints. Lost or broken
  parts should be replaced, and any tubing with indentation greater than 5mm should not be used and put to one side for manufacture repair. Adjustable leg threads should be cleaned and lightly lubricated to keep them free running.
- Brace claws, frame interlock clips, trapdoor latches and platform wind-locks should be regularly checked to ensure that they lock correctly.
- Refer to the XO user guide for detailed inspection and maintenance advice.
- Components should be stored with due care to prevent damage.
- Ensure components are not damaged by excessive strapping forces when transported.

1 Safety First

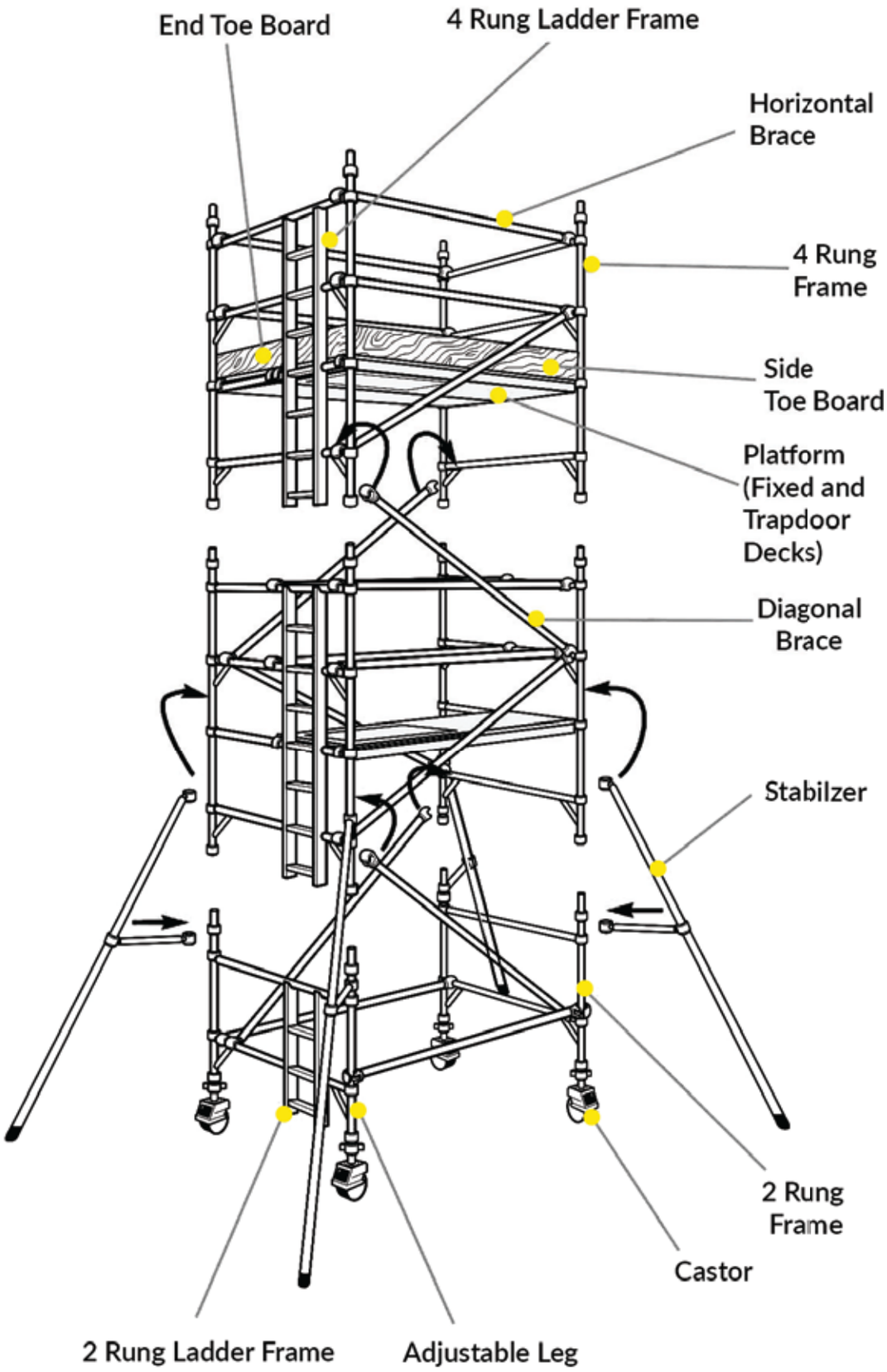

2 Quantity Schedule

2.1.1 XO 1450 Ladderspan to EN 1004: Available in 2 lengths - l.8 m and 2.5m

Towers under 2.5m are outside of the scope of EN1004																									
COMPONENTS	Working Height (m)	4.2m	4.7m	5.2m	5.7m	6.2m	6.7m	7.2m	7.7m	8.2m	8.7m	9.2m	9.7m	10.2m	10.7m	11.2m	11.7m	12.2m	12.7m	13.2m	13.7m	14.2m
	Platform Height (m)	2.2m	2.7m	3.2m	3.7m	4.2m	4.7m	5.2m	5.7m	6.2m	6.7m	7.2m	7.7m	8.2m	8.7m	9.2m	9.7m	10.2m	10.7m	11.2m	11.7m	12.2m
150MM CASTOR (NON TYRED)		4	4	4	4	4	4	4	4	4	4	4	4	4	4	4	4	4	4	4	4	4
ADJUSTABLE LEG ASSEMBLY		4	4	4	4	4	4	4	4	4	4	4	4	4	4	4	4	4	4	4	4	4
1450 2R SPAN FRAME		1	0	0	1	1	0	0	1	1	0	0	1	1	0	0	1	1	0	0	0	1
1450 2R LADDER FRAME		1	0	0	1	1	0	0	1	1	0	0	1	1	0	0	1	1	0	0	0	1
1450 3R SPAN FRAME		0	1	0	1	0	1		1	0	1	0	1		1		1		1	0	1	
1450 3R LADDER FRAME		0	1	0	1	0	1		1	0	1	0	1		1		1		1	0	1	
1450 4R SPAN FRAME		1	1	2	1	2	2	3	2	3	3	4	3	4	4	5	4	5	5	6	5	6
1450 4R LADDER FRAME		1	1	2	1	2	2	3	2	3	3	4	3	4	4	5	4	5	5	6	5	6
1.8 and 2.5M SW TOEBOARD		1	1	1	1	1	1	1	1	1	1	1	1	1	1	1	1	1	1	1	1	1
1.8M and 2.5M TRAPDOOR DECK		1	1	1	2	2	2	2	3	3	3	3	4	4	4	4	5	5	5	5	6	6
1.8M and 2.5M FIXED DECK		1	1	1	1	1	1	1	1	1	1	1	1	1	1	1	1	1	1	1	1	1
1.8M and 2.5M HORIZONTAL BRACING (BLUE)		6	6	6	10	10	10	10	14	14	14	14	18	18	18	18	22	22	22	22	26	26
2.1M and 2.7M DIAGONAL BRACING (RED)		3	4	5	6	7	8	9	10	11	12	13	14	15	16	17	18	19	20	21	22	23
SP7 - UNIVERSAL CLAMP		0	4	4	4	4	4	4	4	0	0	0	0	0	0	0	0	0	0	0	0	0
SP10 - UNIVERSAL CLAMP		0	0	0	0	0	0	0	0	4	4	4	4	4	4	4	4	0	0	0	0	0
SP15 - UNIVERSAL CLAMP		0	0	0	0	0	0	0	0	0	0	0	0	0	0	0	0	4	4	4	4	4
1.8m TOWER Total Self-weight (kgs)		103	146	161	169	175	195	210	231	237	257	272	279	300	306	320	328	334	354	369	377	383
2.5m TOWER Total Self-weight (kgs)		143	169	185	194	201	226	243	264	271	296	313	321	343	354	370	378	385	411	427	436	443

"If you are unable to position the working platform easily from the ground, you may require an additional fixed platform for this tower

See pages 8 and 27 for stabilser positions.

2 Quantity Schedule

2.1.2 Number of working platforms allowed

The **MAXIMUM SAFE WORKING LOAD** {the combined weight of the users, tools and materials) that may be placed on the tower is the total weight less than the self-weight of the tower. The total weight for the towers shown in the schedule is 950kg.

Example 1:

A 1450 tower built using the 3T method with a 4.2m platform height and a platform length of 1.8m has a self-weight of 175kg.

950 Kg	-	**175Kg**	=	**775Kg** Maximum safe working load
Total Weight		Self-Weight		(Users, tools and materials)

Example 2

A 1450 tower built using the 3T method with a 11.7m platform height and a platform length of 2.5m has a self-weight of 436kg.:

950 Kg	-	**436Kg**	=	**514Kg** Maximum safe working load
Total Weight		Self-Weight		(Users, tools and materials)

For Greater heights and loads, consult the manufacturer for guidance

2.1.3 Platform Loading

On a 1450 tower a platform may comprise of a single deck or two decks placed side by side. The maximum safe working load (the combined weight of the users, tools and materials) that may be placed on a platform is 275kg. This must be evenly distributed over either one deck, or two decks placed side by side.

The quantities on pages 7 and 8, will enable XO towers to be built safely and therefore comply with the requirements of the Work at Height Regulations. They include double guardrails to all platforms, and toe boards will need to be added if any levels are used as working platforms and for storage of materials. EN 1004 requires platforms at least every 4.2m, and these measures will exceed that requirement.

2.1.4 Ballast: Internal/external use

There is no requirement for ballast on 1450 towers if using stabilizers as detailed in the table on page 8.

2.1.5 width towers

MP16 outriggers can be used instead

2 Quantity Schedule

Mobile outrigger Kit	Quantity
MP16 Mobile Outrigger	4
125/150/200mm Castor (Use same diameter castors as on tower)	4
250mm Adjustable leg	4
Plan Braces	4
The above components replace: SP15 Stabiliser	4

2.1.6 Stabilisers

To improve rigidity, larger stabilisers can be used at a lower level than shown in the table on page 8.

2.1.7 Angle of stabiliser 1450 tower

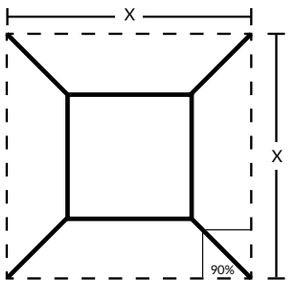

2.1.8 Double width 1450 towers dimension x

	Platform Length 1.8m	Platform Length 2.5m
SP7	X=3351	X=3629
SP10	X=4789	X=5100
SP15	X=5520	X=5838

Stabiliser feet should form a square as shown in the diagram and table above.

2 Quantity Schedule

2.2.1 XO 850 Ladderspan to EN 1004:

Available in 2 lengths - 1.8m and 2.5m

850 width towers

Towers under 2.5m are outside of the scope of EN1004																							
COMPONENTS	Working Height (m)	4.2m	4.7m	5.2m	5.7m	6.2m	6.7m	7.2m	7.7m	8.2m	8.7m	9.2m	9.7m	10.2m	10.7m	11.2m	11.7m	12.2m	12.7m	13.2m
	Platform Height (m)	2.2m	2.7m	3.2m	3.7m	4.2m	4.7m	5.2m	5.7m	6.2m	6.7m	7.2m	7.7m	8.2m	8.7m	9.2m	9.7m	10.2m	10.7m	11.2m
150MM CASTOR (NON TYRED)		4	4	4	4	4	4	4	4	4	4	4	4	4	4	4	4	4	4	4
ADJUSTABLE LEG ASSEMBLY		4	4	4	4	4	4	4	4	4	4	4	4	4	4	4	4	4	4	4
850 2R SPAN FRAME		1	0	0	1	1	0	0	1	1	0	0	1	1	0	0	1	1	0	0
850 2R LADDER FRAME		1	0	0	1	1	0	0	1	1	0	0	1	1	0	0	1	1	0	0
850 3R SPAN FRAME		0	1	0	1	0	1	0	1	0	1	0	1	0	1	0	1	0	1	0
850 3R LADDER FRAME		0	1	0	1	0	1	0	1	0	1	0	1	0	1	0	1	0	1	0
850 4R SPAN FRAME		1	1	2	1	2	2	3	2	3	3	4	3	4	4	5	4	5	5	6
850 4R LADDER FRAME		1	1	2	1	2	2	3	2	3	3	4	3	4	4	5	4	5	5	6
1.8 and 2.5M SW TOEBOARD		1	1	1	1	1	1	1	1	1	1	1	1	1	1	1	1	1	1	1
1.8M and 2.5M TRAPDOOR DECK		1	1	1	2	2	2	2	3	3	3	3	4	4	4	4	5	5	5	5
1.8M and 2.5M HORIZONTAL BRACING (BLUE)		6	6	6	10	10	10	14	14	14	14	18	18	18	18	22	22	22	22	22
2.1M and 2.7M DIAGONAL BRACING (RED)		3	4	5	6	7	8	9	10	11	12	13	14	15	16	17	18	19	20	21
SP7 - UNIVERSAL CLAMP		0	4	4	4	4	4	4	4	0	0	0	0	0	0	0	0	0	0	0
SP10 - UNIVERSAL CLAMP		0	0	0	0	0	0	0	0	4	4	4	4	4	4	4	4	4	4	4
SP15 - UNIVERSAL CLAMP		0	0	0	0	0	0	0	0	0	0	0	0	0	0	0	0	4	4	4
1.8m TOWER Total Self-weight (kgs)		106	126	139	146	151	172	186	204	210	230	243	250	270	276	289	296	301	321	335
2.5m TOWER Total Self-weight (kgs)		117	143	158	194	165	172	198	225	233	239	264	280	286	318	334	341	347	372	468

*If you are unable to position the working platform easily from the ground, you may require an additional fixed platform for this tower height

2 Quantity Schedule

2.2.2 Number of working platforms allowed

The **MAXIMUM SAFE WORKING LOAD** {the combined weight of the users, tools and materials) that may be placed on the tower is the total weight less than the self-weight of the tower. The total weight for the towers shown in the schedule is 950kg.

Example 1:

A 850 tower built using the 3T method with a 4.2m platform height and a platform length of 1.8m has a self-weight of 151kg.

950 Kg	-	**151Kg**	=	**799Kg** Maximum safe working load
Total Weight		Self-Weight		(Users, tools and materials)

Example 2

A 850 tower built using the 3T method with a 11.7m platform height and a platform length of 2.5m has a self-weight of 408kg.:

950 Kg	-	**408Kg**	=	**542Kg** Maximum safe working load
Total Weight		Self-Weight		(Users, tools and materials)

For Greater heights and loads, consult the manufacturer for guidance

2.2.3 Platform Loading

On a 850 tower a platform may comprise of a single deck or two decks placed side by side. The maximum safe working load (the combined weight of the users, tools and materials) that may be placed on a platform is 275kg. This must be evenly distributed over either one deck, or two decks placed side by side.

The quantities on pages 7 and 8, will enable XO towers to be built safely and therefore comply with the requirements of the Work at Height Regulations 2005. They include double guardrails to all platforms, and toe boards will need to be added if any levels are used as working platforms and for storage of materials. EN 1004 requires platforms at least every 4.2m, and these measures will exceed that requirement.

2.2.4 Ballast: Internal/external use

There is no requirement for ballast on 850 towers if using stabilizers as detailed in the table on page 8.

2.2.5 850 width towers

MP16 outriggers can be used instead

2 Quantity Schedule

Mobile outrigger Kit	Quantity
MP16 Mobile Outrigger	4
125/150/200mm Castor (Use same diameter castors as on tower)	4
250mm Adjustable leg	4
Plan Braces	4
The above components replace: SP15 Stabiliser	4

2.2.6 Stabilisers

To improve rigidity, larger stabilisers can be used at a lower level than shown in the table on page 8.

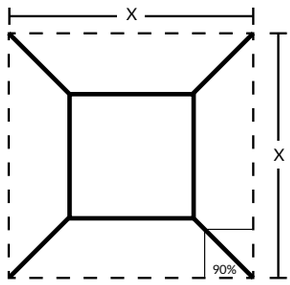

2.2.7 Double width 850 towers dimension x

	Platform Length 1.8m	Platform Length 2.5m
SP7	X=2994	X=3201
SP10	X=4458	X=4734
SP15	X=5195	X=5485

Stabiliser feet should form a square as shown in the diagram and table above.

3 Assembly Procedure

3.1 3T method Assembly and dismantling procedures

3.1.1 When building a XO Tower:

- To comply with the Work at Height Regulations, we show assembly procedures with platforms every 2 metres in height and the locating of guardrails in advance of climbing onto a platform to reduce the risk of a fall.
- All platforms feature double guardrails on both faces of either individual platforms or fully decked levels.
- All guardrails should be 1 and 2 rungs (0.5m and 1.0m) above platforms.
- Never stand on an unguarded platform positioned above the first rung of a tower. If your risk assessment shows it necessary, you may also need to guardrail platforms at thislevel.
- Always start building with the smallest height frames at the base of the tower:

Platform height in metres	Frame at base
1.7, 2.2, 3.7, 4.2, 5.7, 6.2, 7.7, 8.2, 9.7, 10.2, 117, 12.2	2 Rung
2.7, 4. 7, 6. 7, 8.7, 10.7	3 Rung
1.2, 3.2, 5.2, 7.2, 9.2, 11.2	4 Rung

Where all 3 frame heights are used in a tower, start with 2 rung frames at the base, with the 3 rung frames next and the 4 rung frames on the top. Refer to the quantity schedules for detail.

3.1.2 To dismantle a XO Ladderspan tower

- Remove toe boards, and pass down the tower.
- Unclip farthest end of braces and immediately go to protectedtrapdoor position on ladder to complete removal.
- Remove upper platforms from protected platform levels below.
- Pass removed components out of the tower to a colleague.

3 Assembly Procedure

3.2 3T method Checklist

Ensure all brace claws operate and lock correctly prior to erec tion	✓
Inspect components prior to erection	✓
Inspect tower prior to use	✓
Tower upright and level	✓
Castors locked and legs correctly adjusted	✓
Diagonal braces fitted	✓
Stabilisers/outriggers fitted as specified	✓
Platforms located and wind-locks on	✓
Toe boards located	✓
Check guardrails are fitted correctly. See illustration below	✓

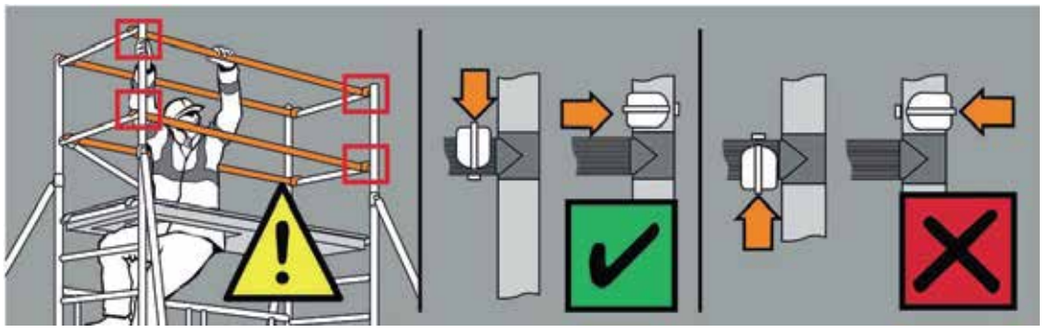

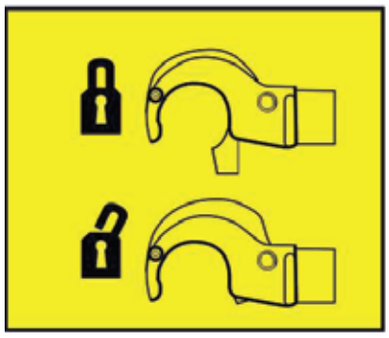

Ensure horizontal braces and guardrails are fitted correctly.
Always fit as shown. Refer to this checklist before using each time.

3 Assembly Procedure

3.3 1450 3T method assembly for 1450 towers

Always start building with the smallest height frames at the base of the tower:

Platform height in metres	Frame at base
1.7, 2.2, 3.7, 4.2, 5.7, 6.2, 7.7, 8.2, 9.7, 10.2, 117, 12.2	2 Rung
2.7, 4. 7, 6. 7, 8.7, 10.7	3 Rung
1.2, 3.2, 5.2, 7.2, 9.2, 11.2	4 Rung

Where all three frame heights are used in a tower, start with 2 rung frames at the base, with the 3 rung frames next and the 4 rung frames on the top. Refer to the Quantity Schedules for detail.
The procedure illustrated shows 4.2m platform height tower starting with a 2 rung frame.
The manufacturer recommends two persons are used to build XO Towers. Above 4m height, it is essential that at least two persons are used. Only climb the tower from the inside.

1. Push castor into adjustable leg. Push castor/adjustable leg assemblies into 2 rung span frame. Lock castors. Repeat procedure with 2 rung ladder frame.

It is recommended that for ease of levelling a gap of 50mm is left between the bottom of the leg and the adjustable nut. Adjustable Legs are for levelling only. You must not adjust all four to gain extra height.

NB: Base plates can be fitted to adjustable legs in lieu of castors if it is not necessary to move the tower.

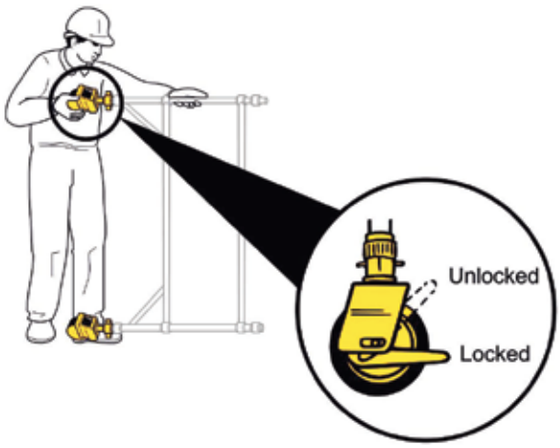

3 Assembly Procedure

2. Fit one horizontal brace (red) onto the vertical of a span frame, just above the bottom rung, with the claw facing outwards. The frame will now be self-supporting.

Note: All locking claws must be opened before fitting.

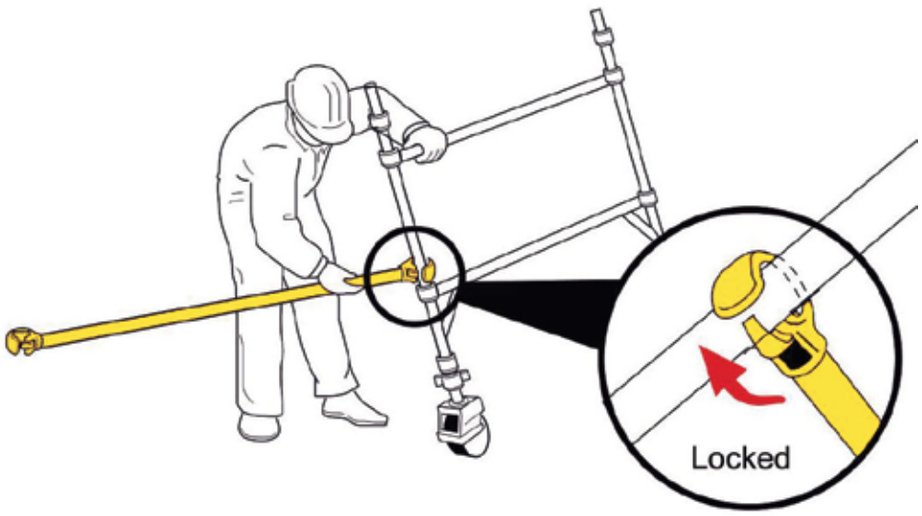

3. Position the ladder frame as shown and fit the other end of the horizontal brace on to the vertical Uust above the bottom rung). Fit a second horizontal brace between the bottom rungs on the other side of the frames to square the tower.

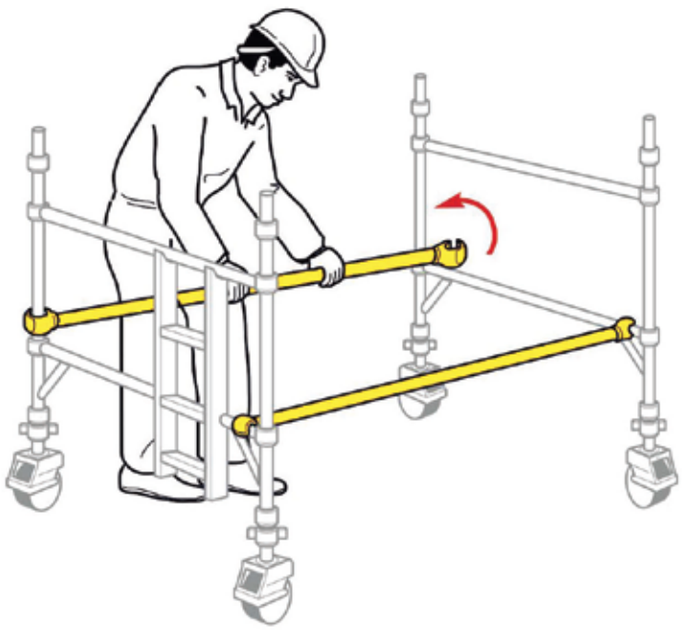

3 Assembly Procedure

4. Fit two additional end frames, ensuring the frame interlock clips are engaged. Fit two diagonal braces (blue) in opposing directions, between the 1st and the 3rd rungs. Ensure the frames are vertical and level by checking with a spirit level and setting the adjustable legs as required.

IMPORTANT - Only use the adjustable legs to level the tower and not to gain extra height.

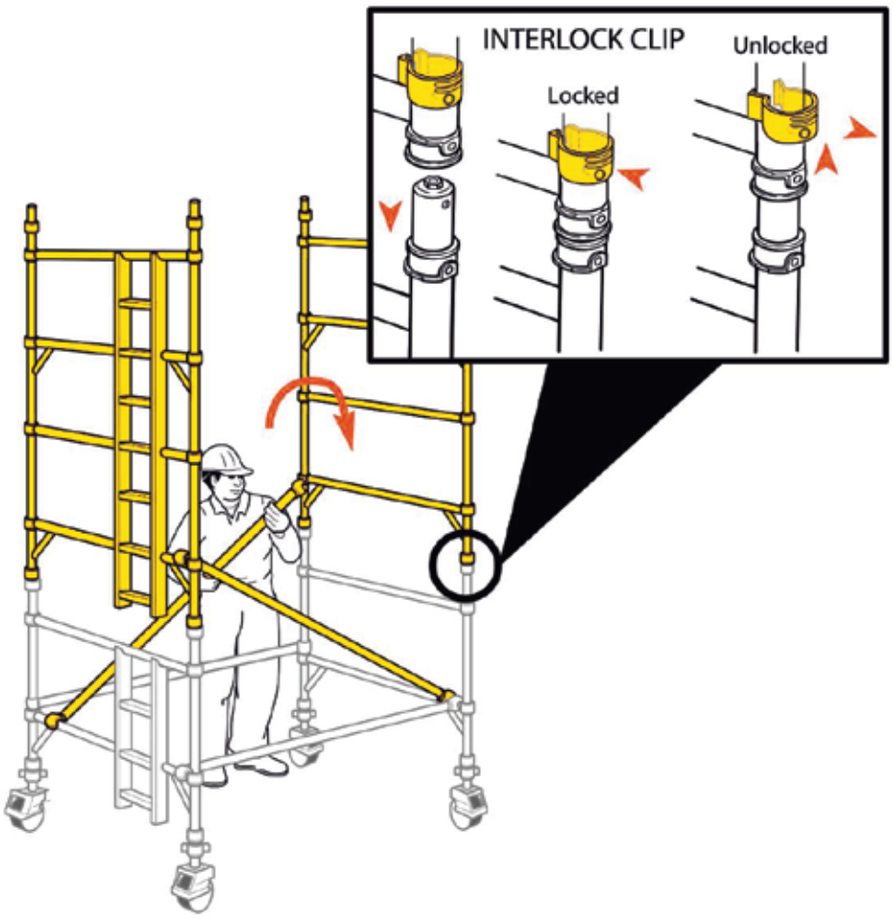

3 Assembly Procedure

5. Fit a temporary deck on the lowest rungs. Fit a trapdoor deck on the 4th rung (2.0m) with the trapdoor next to the ladder. Ensure the trapdoor is positioned with the hinges towards the outside of the tower as shown. Climb the ladder and, from the protected trapdoor position, fit guardrails on the 5th and 6th rungs (in that order) on both sides of the platform

Do not climb onto the deck until all guardrails are in place.

When horizontal braces are fitted as guardrails, they should be 0.5m and 1.0m (1 and 2 rungs) above the platform level in all cases. Remove the temporary deck from the lowest rung.

3 Assembly Procedure

6. Fit the next pair of diagonal braces in opposing directions between the 3rd and 5th rungs. Add two additional end frames.

7. Add two more diagonal braces between the 5th and 7th rungs. If finishing at this height (4.2m platform) reposition the fixed deck to the 8th rung on the tower. Fit a trapdoor deck alongside it, with the hinges towards the outside of the tower, and the trapdoor next to the ladder. Add a single diagonal between the 7th and 9th rungs as shown. Climb up the ladder, and from the protected trapdoor position, fit the guardrails on the 9th and 10th rungs, in that order, on both sides of the tower.

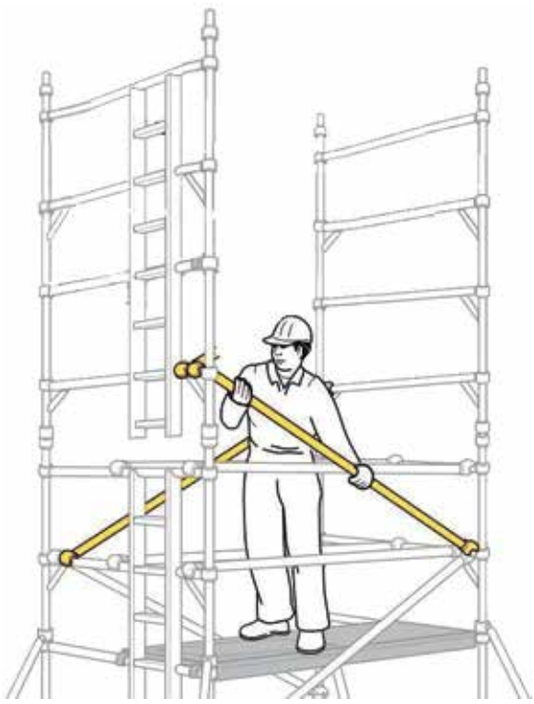

3 Assembly Procedure

3.3.1 When building beyond a 4.2m platform height.

8. Continue to add pairs of end frames, diagonal braces and fit trapdoor decks as shown in the previous steps. Add guardrails at 0.5m and 1.0m, (in that order), above the platform from the protected trapdoor position.

Do not climb onto the deck until all guardrails are in place.

Continue until the required height is reached. Re-position the fixed deck to the required platform height and fit a trapdoor deck alongside it as shown in **Stage 7**. Fit a single diagonal at the top of the tower as shown in **Stage 7**. Fit the final guardrails as shown in **Stage 7**.

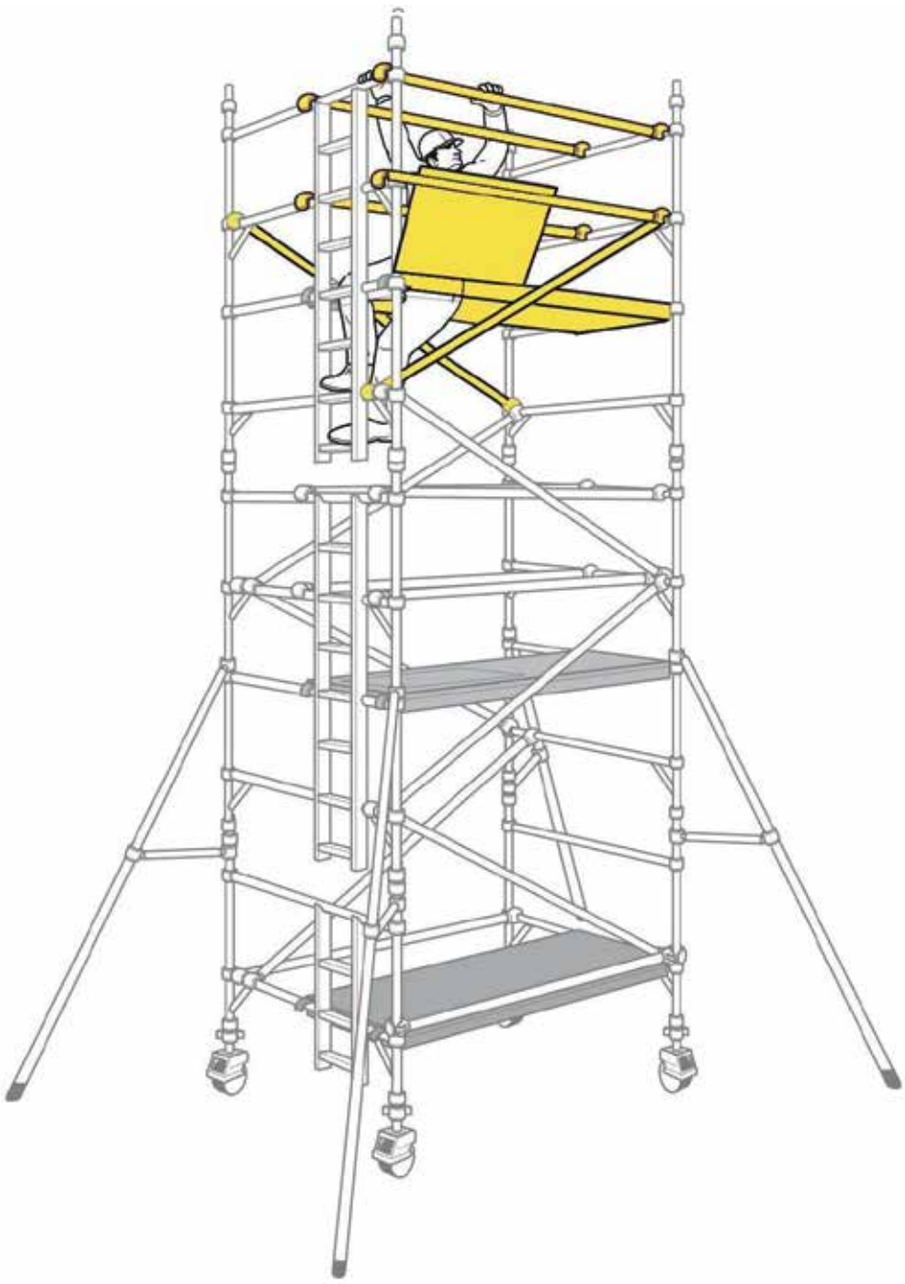

3 Assembly Procedure

9. Fit toe boards (see instructions on page 29). The tower is now complete

3.3.2 Dismantling Procedure

10. To take down the tower reverse the building sequence. When removing guardrail braces, unlock the four claws furthest from the trapdoor and then retum immediately to the protected position within the trapdoor. You may then unlock the claws at the other ends of the guardrails to remove them from the tower.

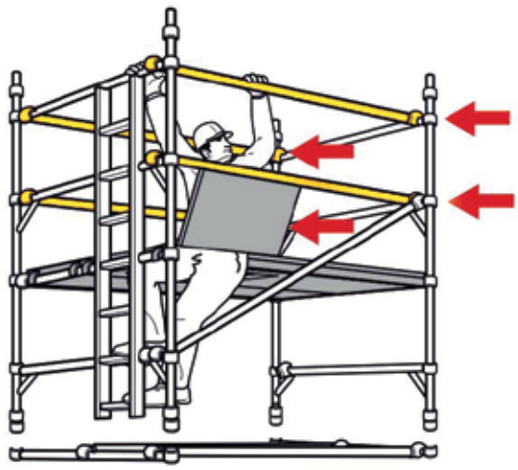

3 Assembly Procedure

3.4 3T method Assembly for 850 towers

Always start building with the smallest height frames at the base of the tower:

Platform height in metres	Frame at base
1.7, 2.2, 3.7, 4.2, 5.7, 6.2, 7.7, 8.2, 9.7, 10.2, 117, 12.2	2 Rung
2.7, 4. 7, 6. 7, 8.7, 10.7	3 Rung
1.2, 3.2, 5.2, 7.2, 9.2, 11.2	4 Rung

Where all three frame heights are used in a tower, start with 2 rung frames at the base, with the 3 rung frames next and the 4 rung frames on the top. Refer to the quantity schedules for detail. The procedure illustrated shows a 3.2m platform height tower starting with a 4 rung frame.

1. Insert adjustable leg/castor assemblies into end frames and lock the castors (see diagram Step 1 - page 17). Base plates can be fitted to the adjustable legs if it is not necessary to move the tower. Fit two horizontal braces to the 850 end frames as shown in Steps 2 and 3 for the 1450 tower procedure (page 18).

2. Fit a trapdoor deck on the 2nd rung. Fix the horizontal braces (red) as guardrails on the 3rd and 4th rungs (2 and 4 rungs above the platform) on both sides of the tower. 24braces to the 850 end frames as shown in Steps 2 and 3 for the 1450 tower procedure (page 18).

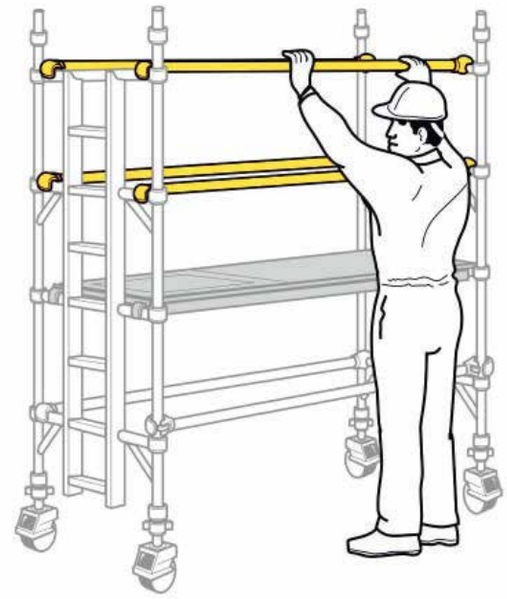

3 Assembly Procedure

3. Fit two diagonal braces in opposing directions between the1st and 3rd rungs. Ensure that the frames are vertical and level by checking with a spirit level and setting the adjustable legs as necessary. Fit stabilisers (see notes on page 30). Fit the next pair of end frames and check the frame interlock clips are engaged.

IMPORTANT. Only use the adjustment on the legs to level the tower and not to gain extra height.

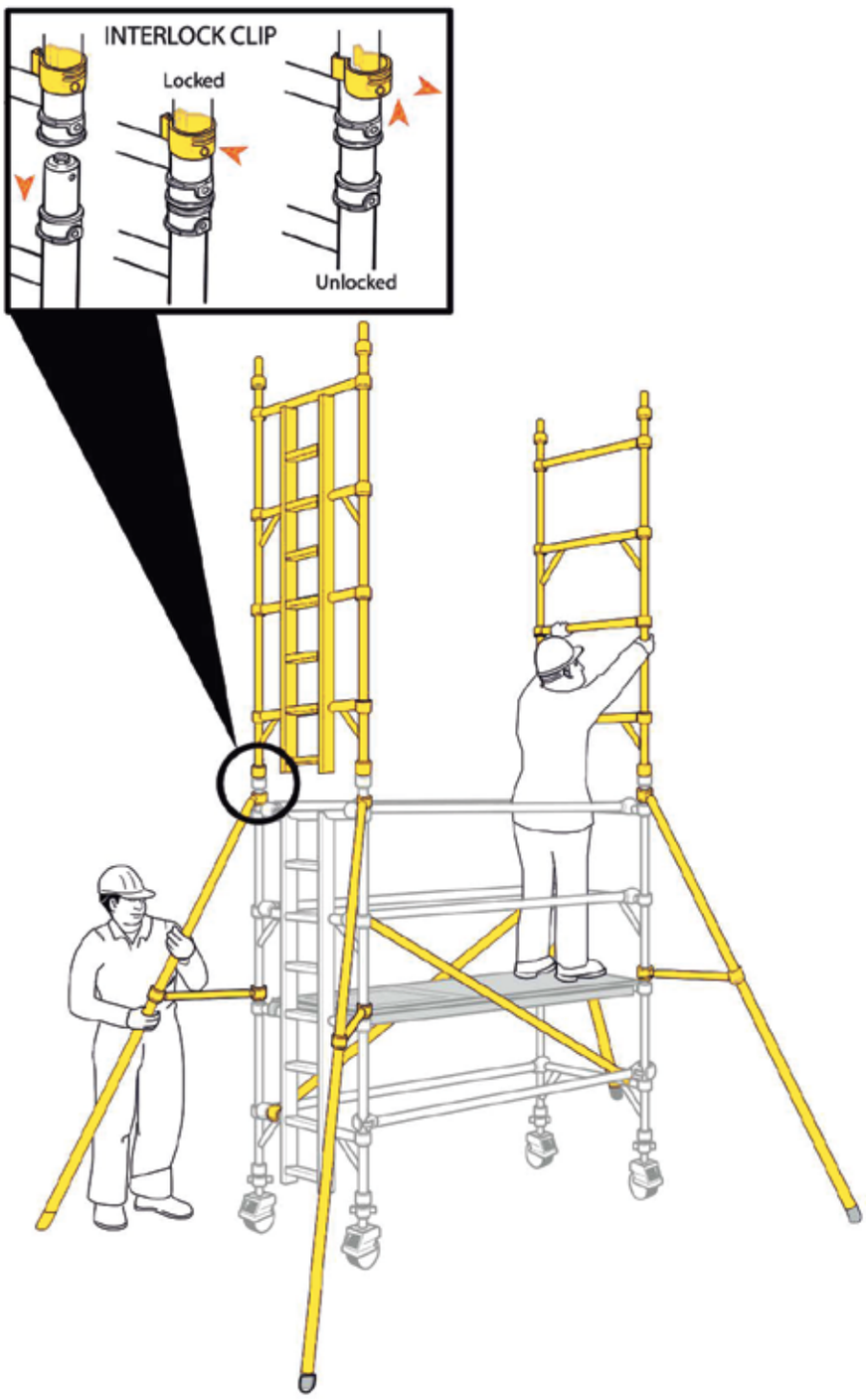

3 Assembly Procedure

4. Fit two pairs of diagonal braces in opposing directionsbetween the 3rd and 5th rungs and the 5th and 7th rungs. Locate a trapdoor deck on the 6th rung, with the trapdoor next to the ladder.

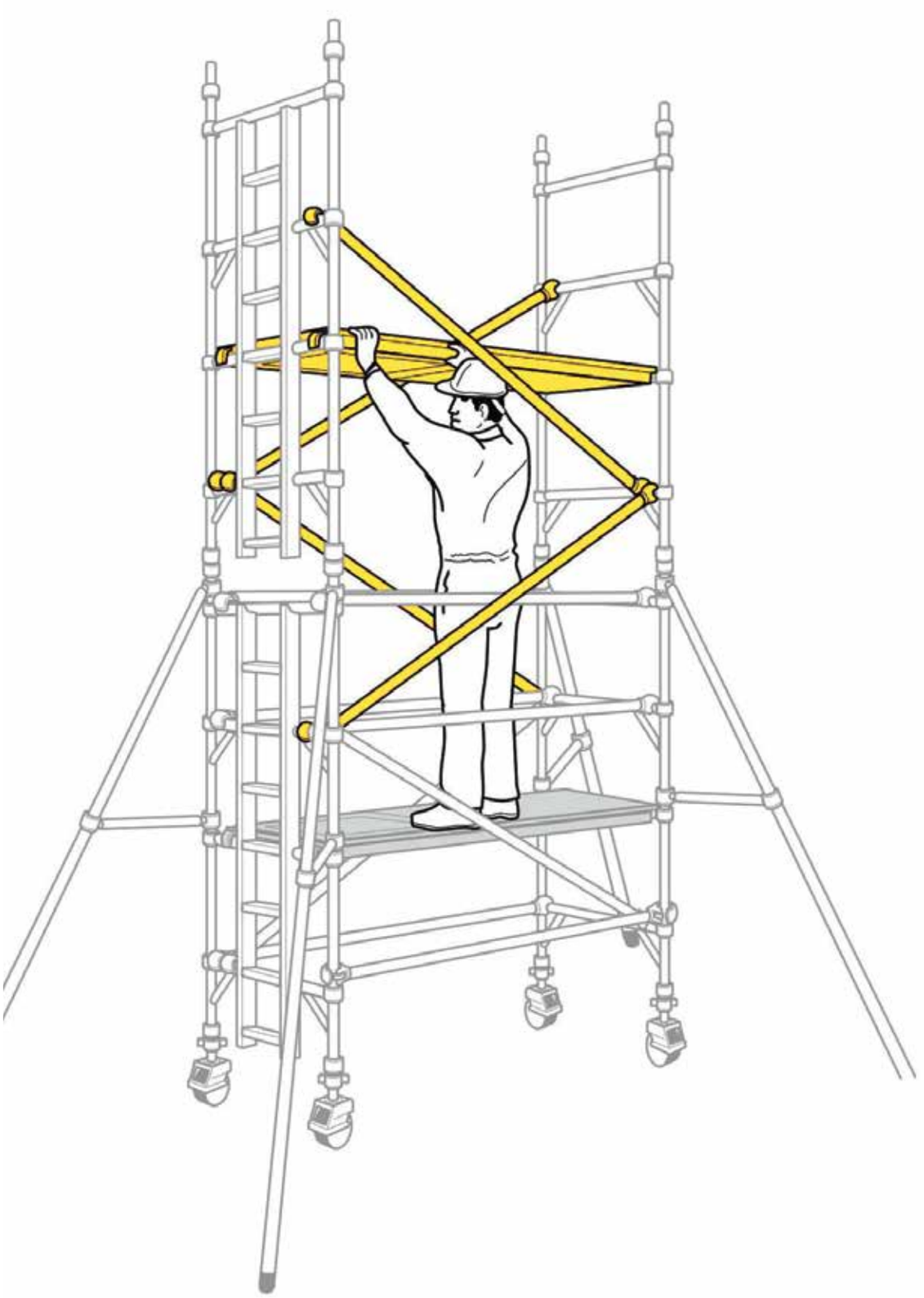

3 Assembly Procedure

5. Climb up the inside of the tower and from the protected position of the trapdoor, fit guardrails to the 7th and 8th rungs (in that order) on both sides of the tower.

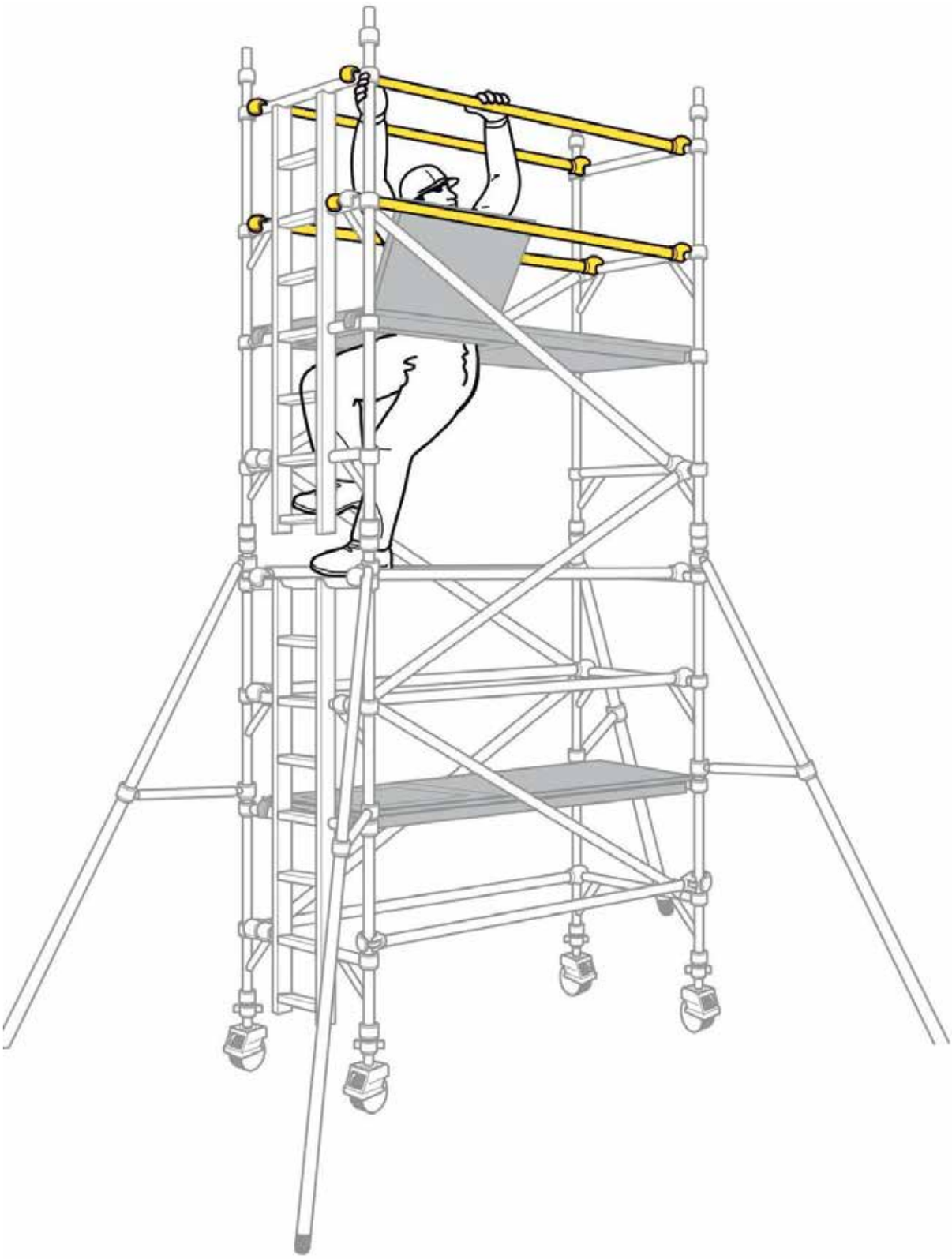

3 Assembly Procedure

6. Continue the procedure until the required working height is reached, adding additional pairs of end frames, diagonal braces and fitting trapdoor platforms, as shown on previous steps. At every mplatform level, add horizontal braces as guardrails from the protected mposition within the trapdoor (as shown in Step 5). Fit a single diagonal at the top of the tower as shown. Fit the toe boards (see instruction on page 29). The tower is now complete.

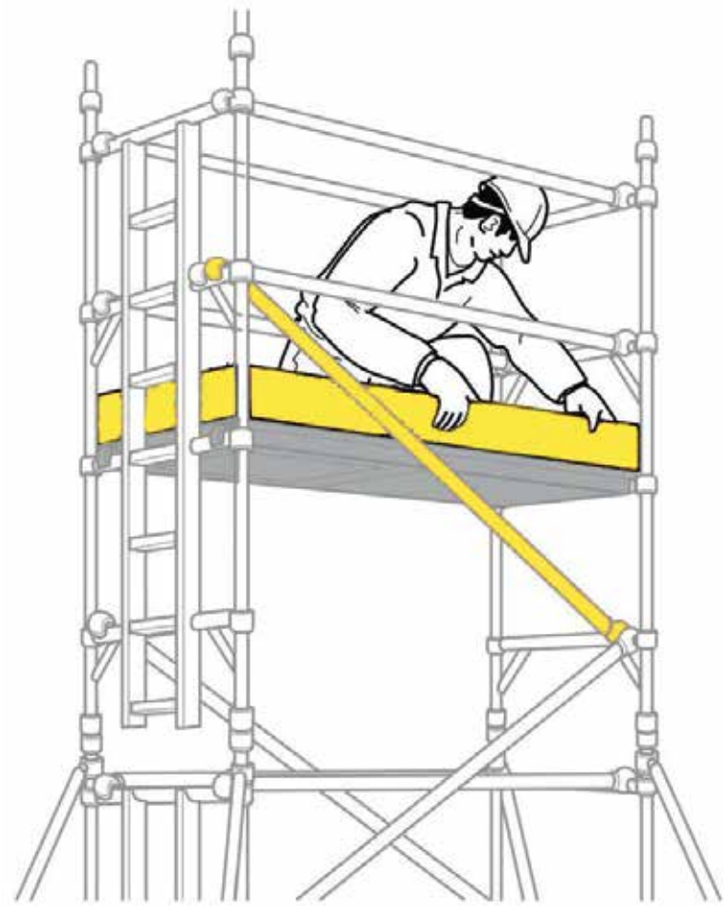

3.4.1 Dismantling Procedure

7. To take down the tower reverse the building sequence. When removing guardrail braces, unlock the four claws furthest from the trapdoor and then return immediately to the protected position within the trapdoor. You may then unlock the claws at the other ends of the guardrails to remove them from the tower.

4 Toe Boards

4.1 3T method Fitting toe boards

Lock yellow plastic toe board clips over rung and deck claw as shown. Position as (A) on right hand deck claw. On other side of the working platform, position the clip as (B). Place 25mm thick toe boards into slots in toe board clips as shown.

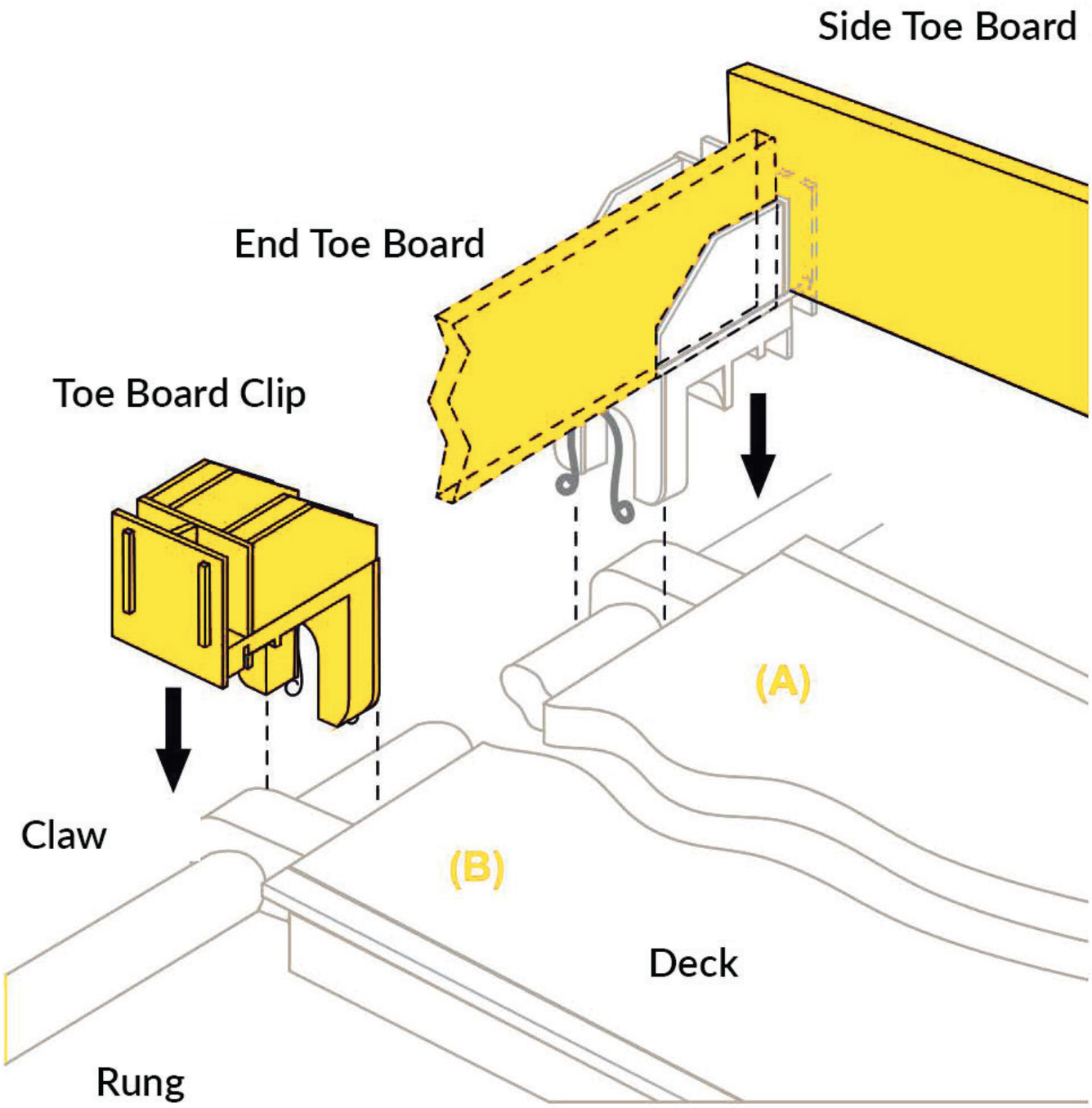

5 Stabilisers and Outriggers

5.1 3T method Stabilisers

Attach one stabiliser to each corner of the tower as shown. Ensure that stabiliser feet are equally spaced to form a square.
SP10 and SP15 telescopic stabilisers must always be fully extended.
Position the lower clamp so that the lower arm is as close to the horizontal as possible. Adjust the position of the top clamp to ensure the stabiliser foot is in firm contact with the ground. Ensure clamps are secure.
Stabilisers are used when the tower is to be moved occasionally; frequent movement will require mobile outriggers.
When moving the tower, adjust the top clamps to lift the four stabiliser feet a maximum of 25mm off the ground and then unlockthe castor brakes. After moving ensure all four stabiliser feet are repositioned in firm contact with the ground.

5.2 Stabiliser dimensions

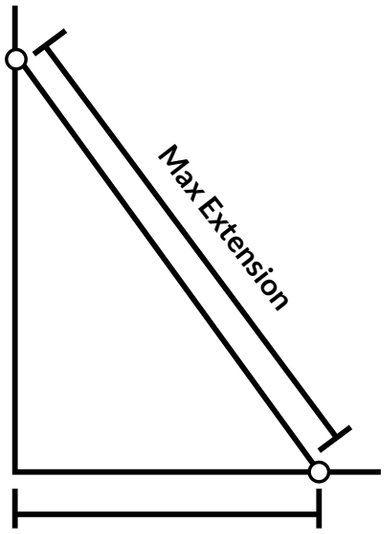

	y
SP7	1227
SP10	2241
SP15	2757

5.3 Outriggers

For information on mobile outriggers please consult your supplier.

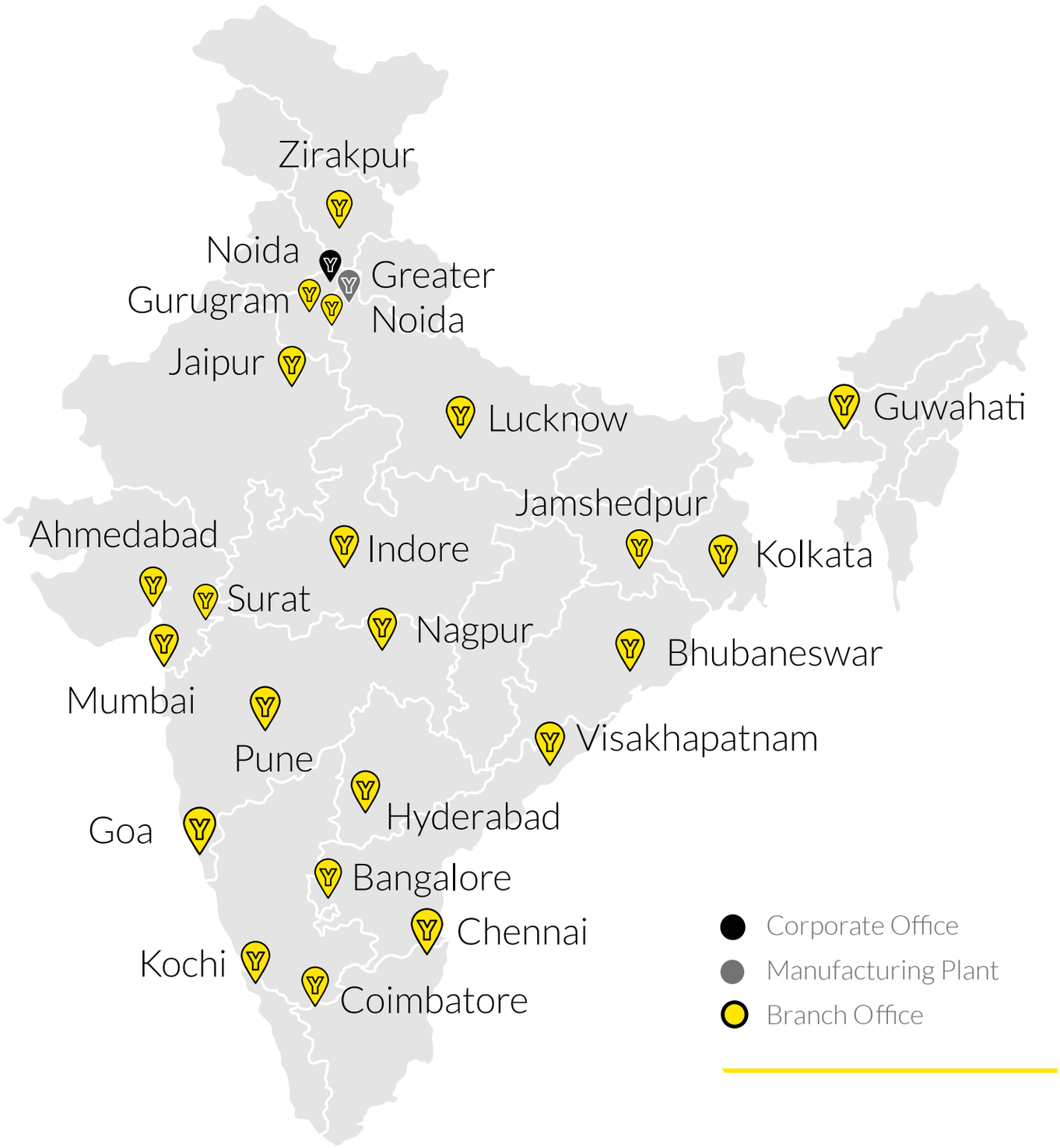

Headquarter & Manufacturing plant

Y-Access Manufacturing Pvt.Ltd.

Plot 14 Ecotech 1 Ext Greater Noida, Uttar Pradesh, India, 201310

+91-9015964626 | +91-9205586056

sales@ymfg.co.in | ymfg.co.in

Scan for more information